83351,83352,83353,83354,
83355,83356,83357

0AK03X3
0AK08
N826X#00002
00Z05
00Z04
MOTOR#10123
SCREW#10728X2
N825X#MT01
#MT01
N816X#MTS03X5
TRAIN#MT122X10
00L01X4
0AK04X2
0AK06X2
0AF01
0AF02
00B02
SCREW#00173X3
0AM08
0AN04
00E03
#MT09
N811X#MT19X2
#MT13
#MT15
00E01
00D02
#MT10
#MT07
#MT14
00D01
#MT11
#MT12
00F02
0AJ02
00E02
SCREW#10900X2
00L02X4
TRAIN#0R007X4
#MT33
00C02
0AF03
0AG02X3
0AG01
0AN01
N825X#MT13
00T02
0AK02X2
#MT03X2
0AM04
N816X#MTS03
00C01
0AE01
SCREW#10675X2
0AJ07
SCREW#10547
#MT02X2
N811X-00Q05X2
N816X#MTS03
0AM03
SCREW#10450
N825X-00F01
N8888#MT09
N8888-00M01
N8888-00P01
N8888#MTZ05
00B01
N811X#MT19X2
#MT08
0AK01X2
0AK05X3
0AK07X3
#MT04X4
#MT32X4
0AJ06
00T01
00Z01
+PCB01
SCREW#10872X2
#MT15
00E03
00D02
#MT11
#MT10
00E02
0AJ01
00F01
00E01
#MT12
#MT14
00D01
#MT13
#MT06

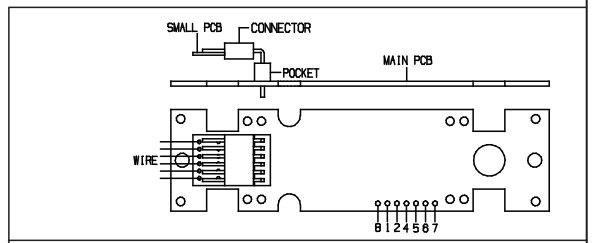

83351,83352,83353,
83354,83355,83357

83356

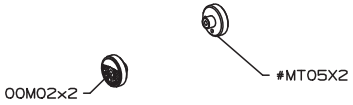

83351,83352,83353,
83355,83356,83357

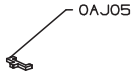

83354

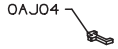

JOIN NO. ON PCB	1	2	4	5	6	7	8
WIRING TO:	MOTOR	REVERSE LIGHT	PICK UP LEFT	MOTOR	FORWARD LIGHT	LIGHT COMMON	PICK UP RIGHT
WIRE COLOR	ORANGE	YELLOW	BLACK	GREY	WHITE	BLUE	RED

DIAGRAM A

Correct placement of conncetor:
Connector(up) face upware

Optional decoder installation:
1.Remove the tender body from the tender chassis by unscrew which under neath the tender chassis.
2.Connect the wires directly to the decoder wires,Match the color of wires according the diagram 'A' & sketch 'A'

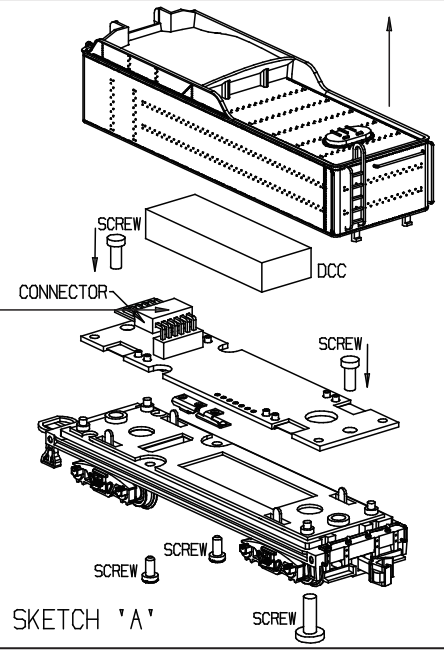

SKETCH 'A'