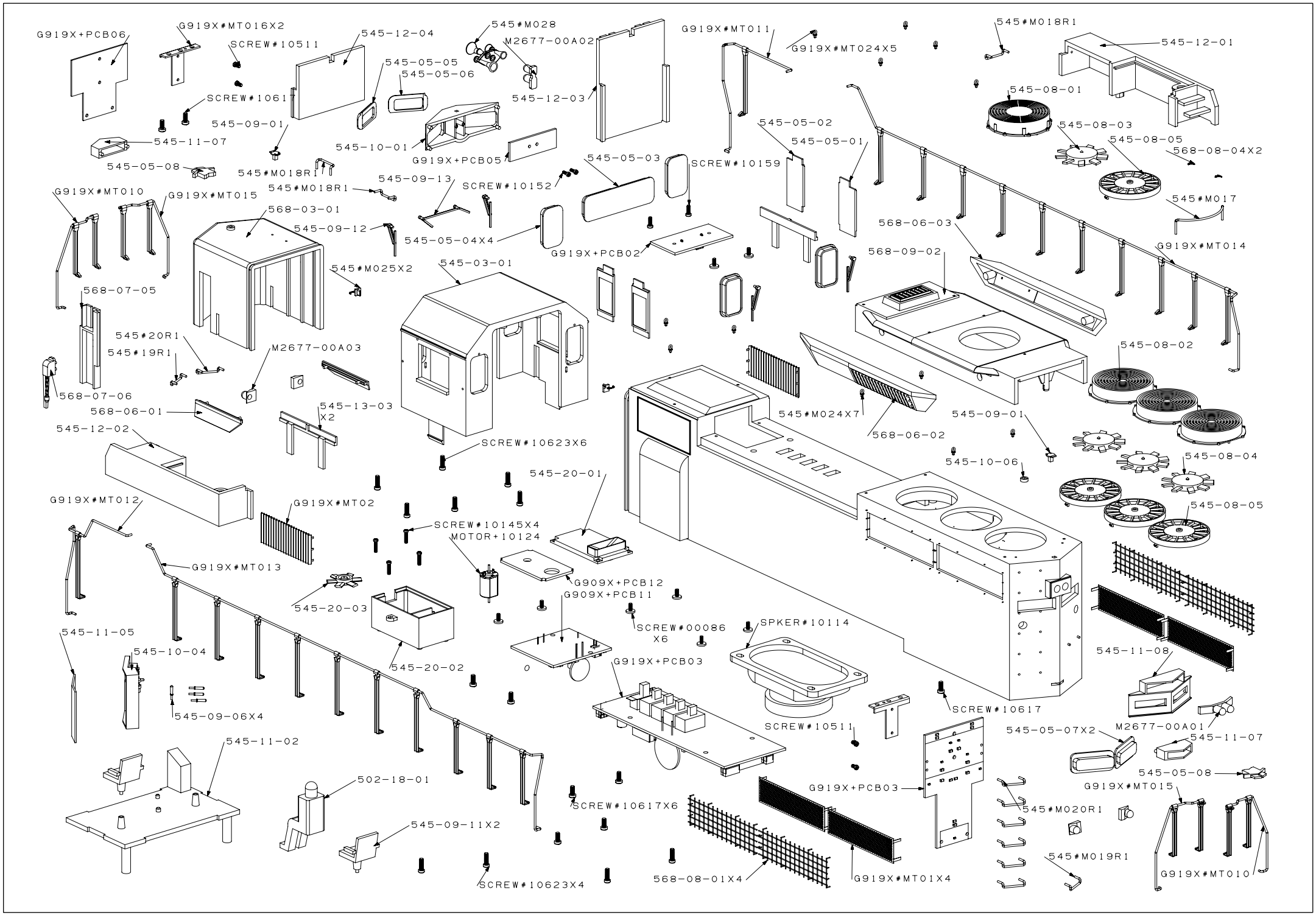
G919X+PCB06
G919X#MT016X2
SCREW#10511
545-12-04
545#M028
M2677-00A02
545-05-05
545-05-06
G919X#MT011
G919X#MT024X5
545#M018R1
545-12-01
SCREW#1061
545-12-03
545-08-01
545-09-01
545-05-02
545-08-03
545-11-07
545-10-01
G919X+PCB05
545-05-01
545-08-05
568-08-04X2
545-05-08
545#M018R1
545-05-03
SCREW#10159
545-09-13
SCREW#10152
G919X#MT010
G919X#MT015
568-03-01
545#M017
545-09-12
545-05-04X4
568-06-03
G919X#MT014
G919X+PCB02
568-09-02
545#M025X2
545-03-01
568-07-05
545#20R1
545#19R1
M2677-00A03
545-08-02
568-07-06
568-06-01
545-13-03
X2
545#M024X7
545-09-01
568-06-02
545-12-02
SCREW#10623X6
545-10-06
545-08-04
545-20-01
G919X#MT012
G919X#MT02
545-08-05
SCREW#10145X4
MOTOR+10124
G919X#MT013
G909X+PCB12
G909X+PCB11
545-20-03
SCREW#00086
X6
SPKER#10114
545-11-05
545-10-04
545-11-08
545-20-02
G919X+PCB03
SCREW#10617
SCREW#10511
M2677-00A01
545-05-07X2
545-11-07
545-09-06X4
545-11-02
545-05-08
502-18-01
G919X+PCB03
G919X#MT015
SCREW#10617X6
545#M020R1
545-09-11X2
545#M019R1
568-08-01X4
G919X#MT01X4
G919X#MT010
SCREW#10623X4

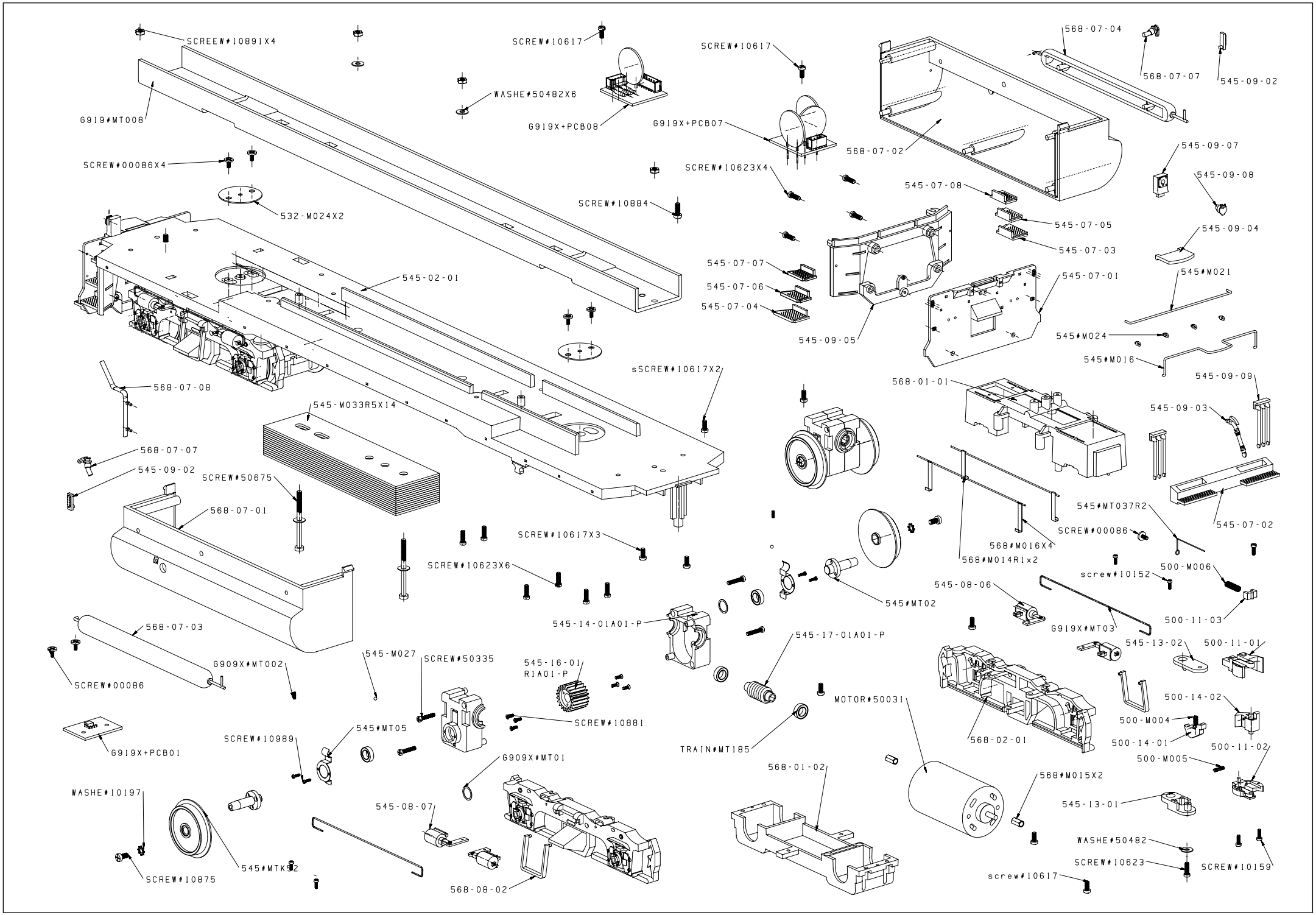
SCREEW#10891X4
G919#MT008
SCREW#10617
WASHE#50482X6
G919X+PCB08
SCREW#10617
G919X+PCB07
568-07-04
568-07-07
545-09-02
568-07-02
SCREW#00086X4
532-M024X2
SCREW#10623X4
SCREW#10884
545-07-08
545-07-05
545-07-03
545-09-07
545-09-08
545-09-04
545-07-07
545-07-06
545-07-04
545-09-05
545-07-01
545#M021
545-02-01
545#M024
545#M016
568-07-08
sSCREW#10617X2
568-01-01
545-09-09
545-09-03
545-M033R5X14
568-07-07
545-09-02
SCREW#50675
568-07-01
545#MT037R2
545-07-02
SCREW#10617X3
SCREW#00086
568#M016X4
568#M014R1x2
SCREW#10623X6
screw#10152
500-M006
545-08-06
545#MT02
500-11-03
568-07-03
545-14-01A01-P
G919X#MT03
545-17-01A01-P
545-13-02
500-11-01
G909X#MT002
545-M027
SCREW#50335
545-16-01
R1A01-P
SCREW#00086
MOTOR#50031
500-14-02
500-M004
SCREW#10881
545#MT05
SCREW#10989
568-02-01
500-14-01
500-11-02
G919X+PCB01
TRAIN#MT185
G909X#MT01
500-M005
568-01-02
568#M015X2
WASHE#10197
545-08-07
545-13-01
WASHE#50482
SCREW#10623
SCREW#10159
545#MTK02
SCREW#10875
568-08-02
screw#10617

G919X-IS002