LI'L BIG HAULERS
0-4-0 TANK LOCOMOTIVE

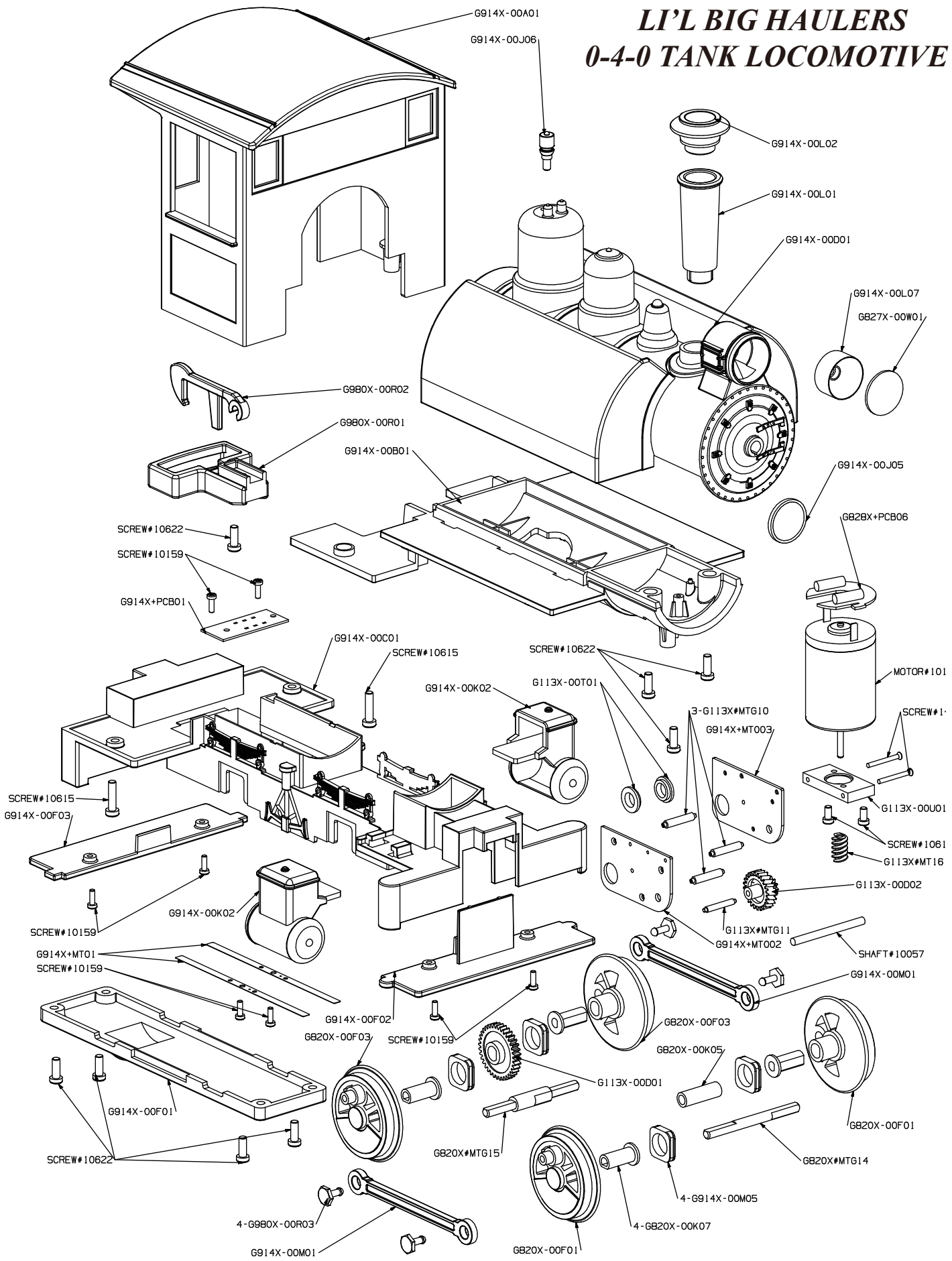

BACHMANN INDUSTRIES, INC.
1400 East Erie Avenue
Philadelphia, Pennsylvania 19124 USA
800-356-3910
www.bachmanntrains.com
Printed in China