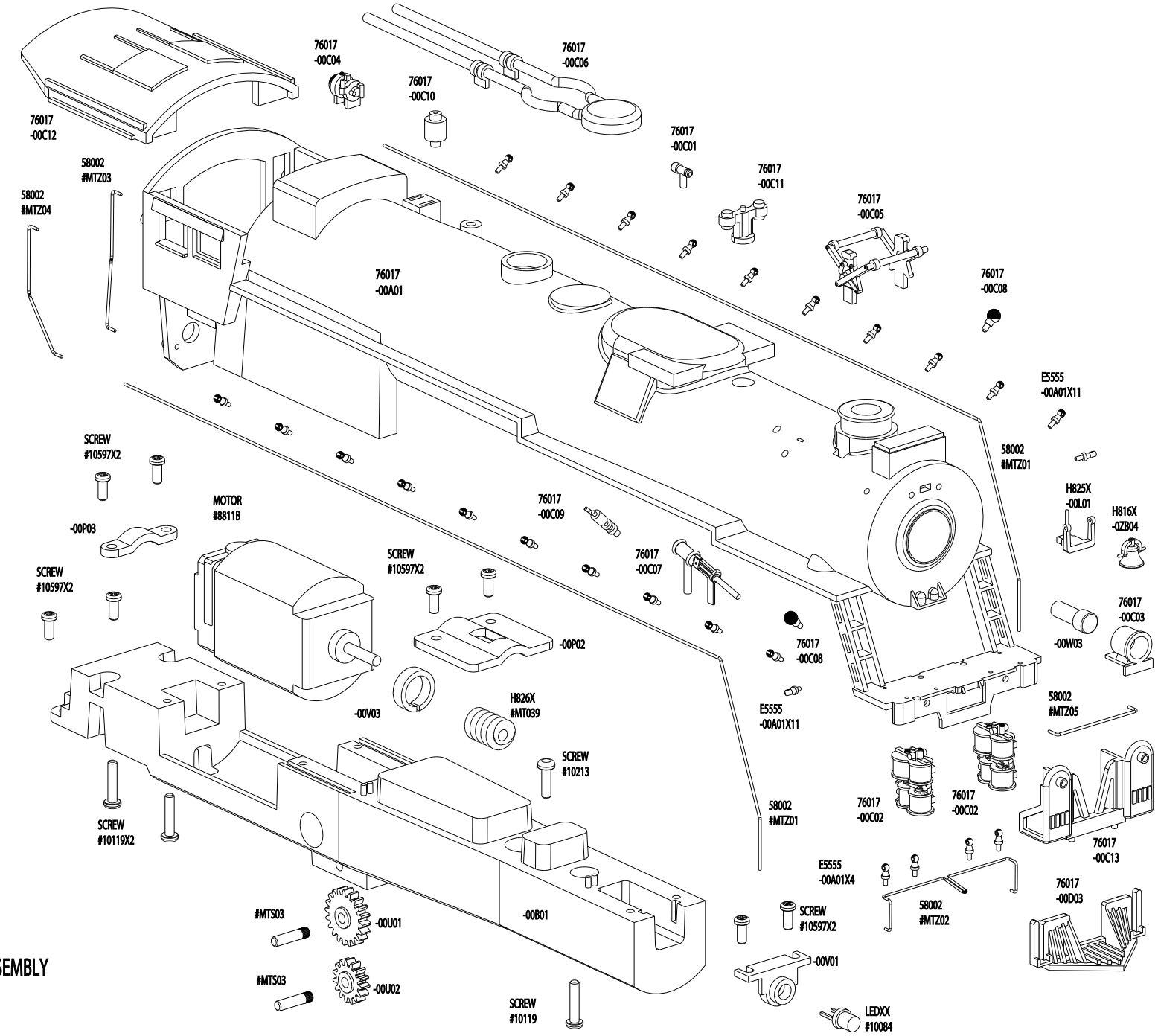

BODY SHELL ASSEMBLY

LOCOMOTIVE CHASSIS ASSEMBLY

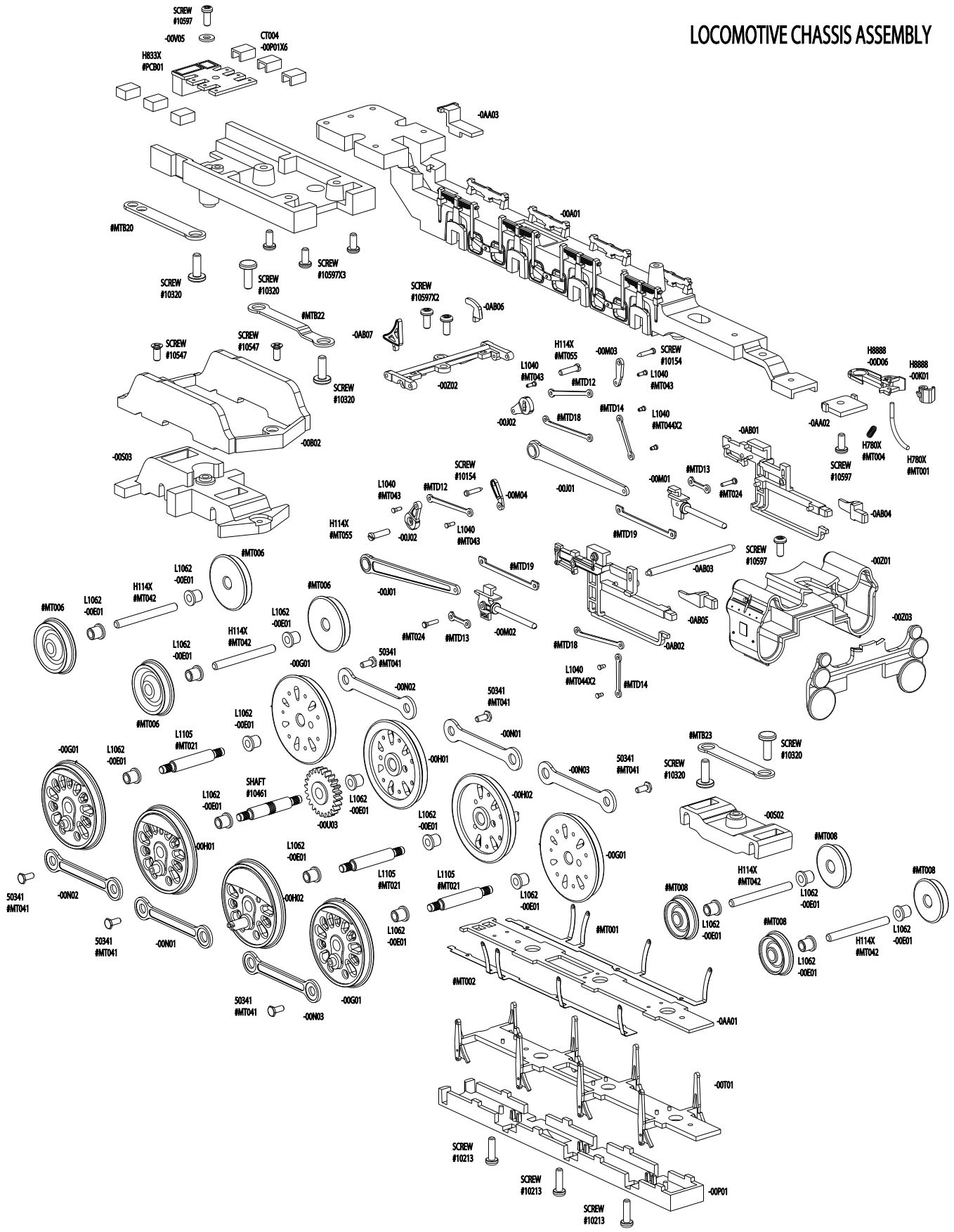

TENDER ASSEMBLY

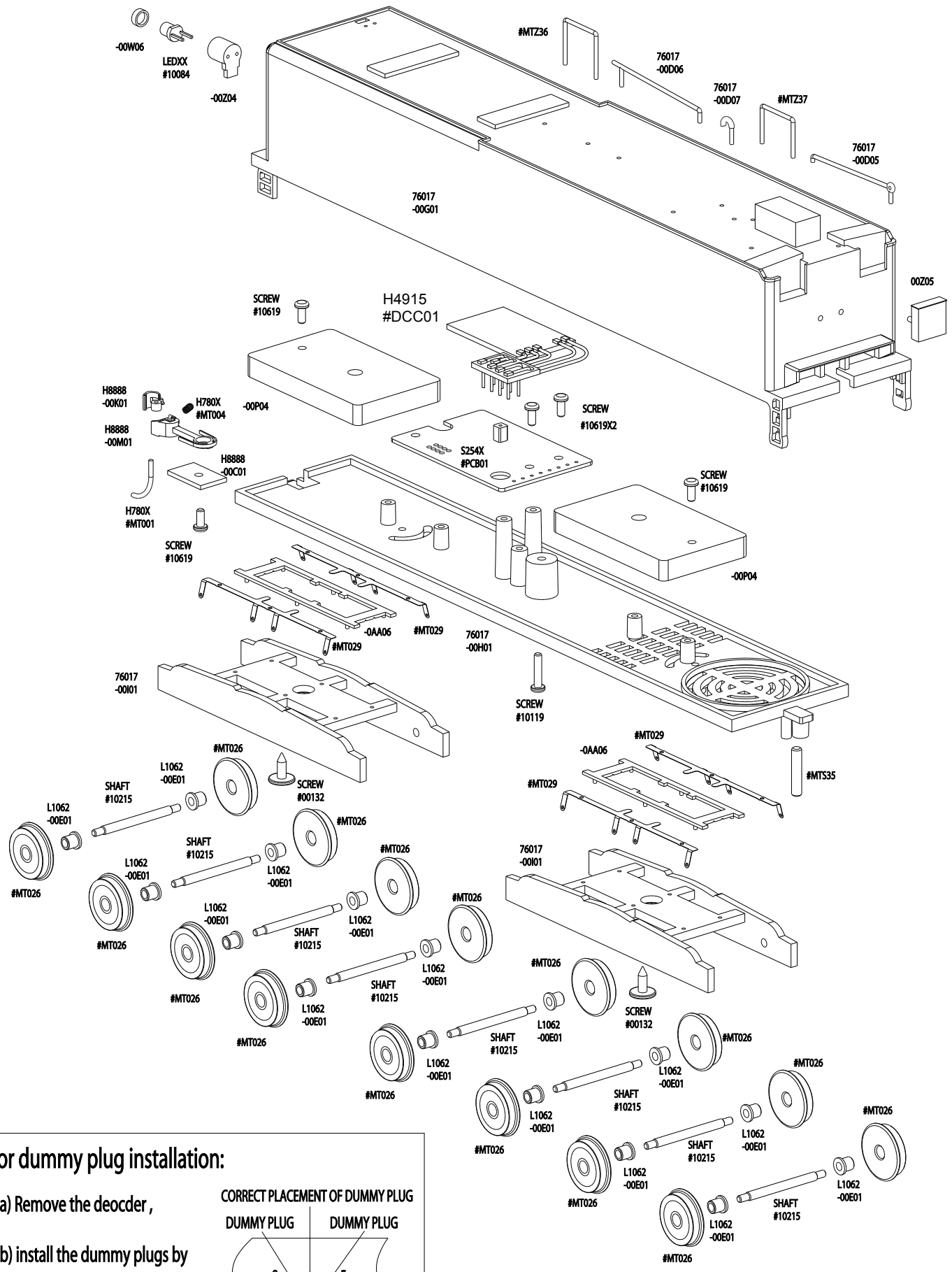

For dummy plug installation:

a) Remove the deocder ,
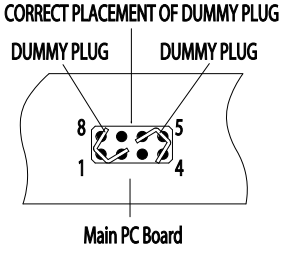
b) install the dummy plugs by tool (see diagram on right).