BODY SHELL ASSEMBLY

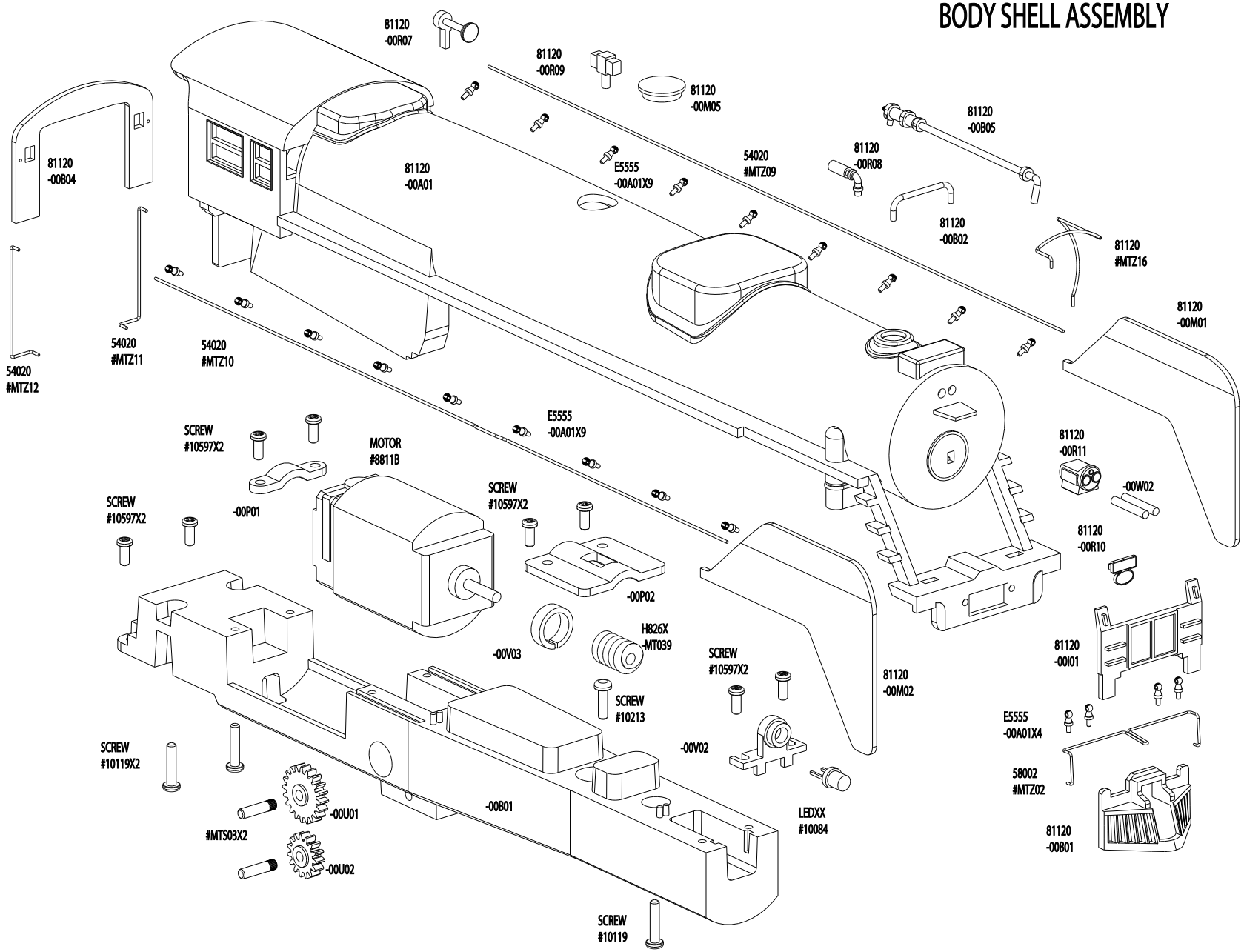

LOCOMOTIVE CHASSIS ASSEMBLY

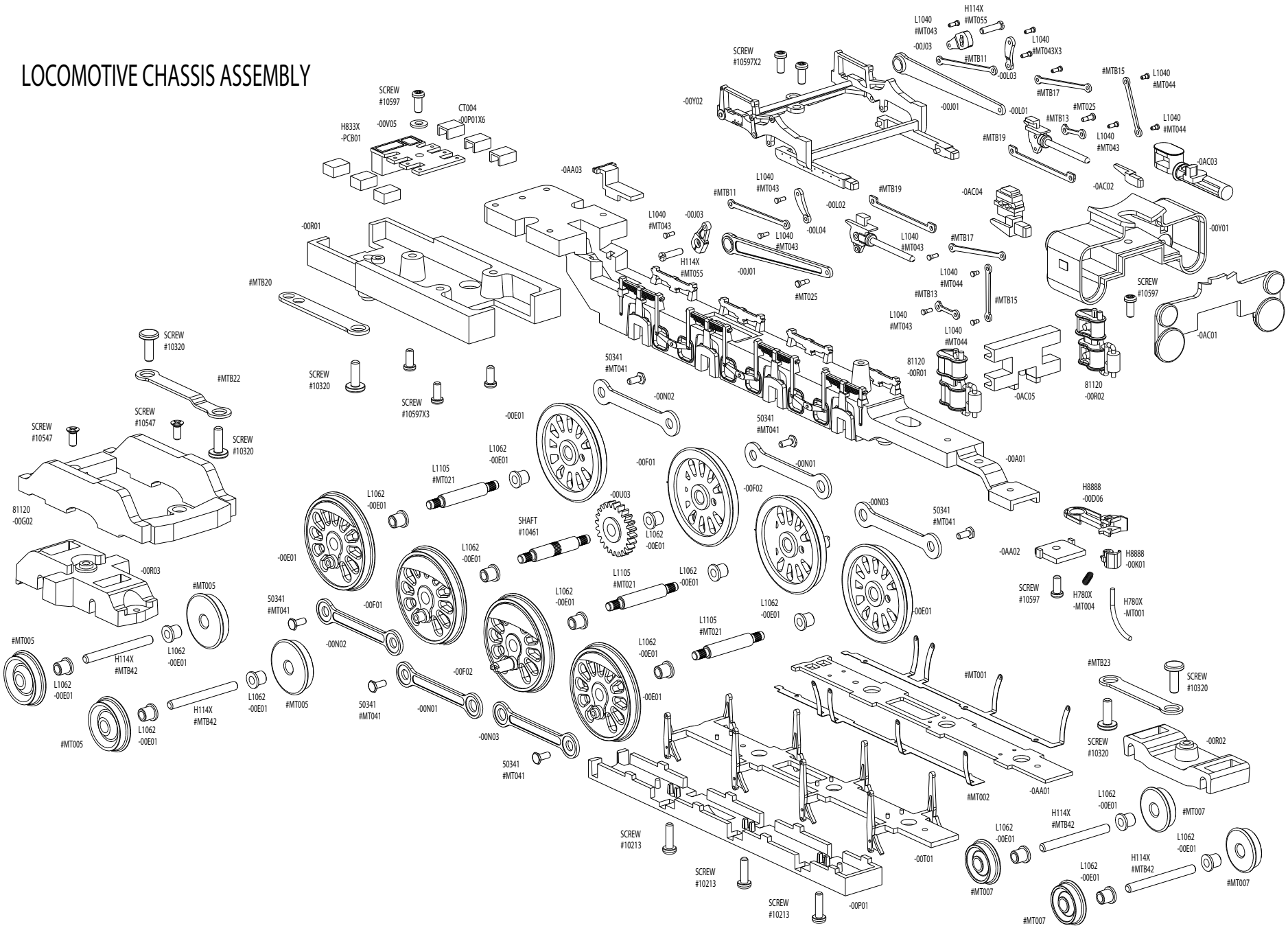

TENDER ASSEMBLY

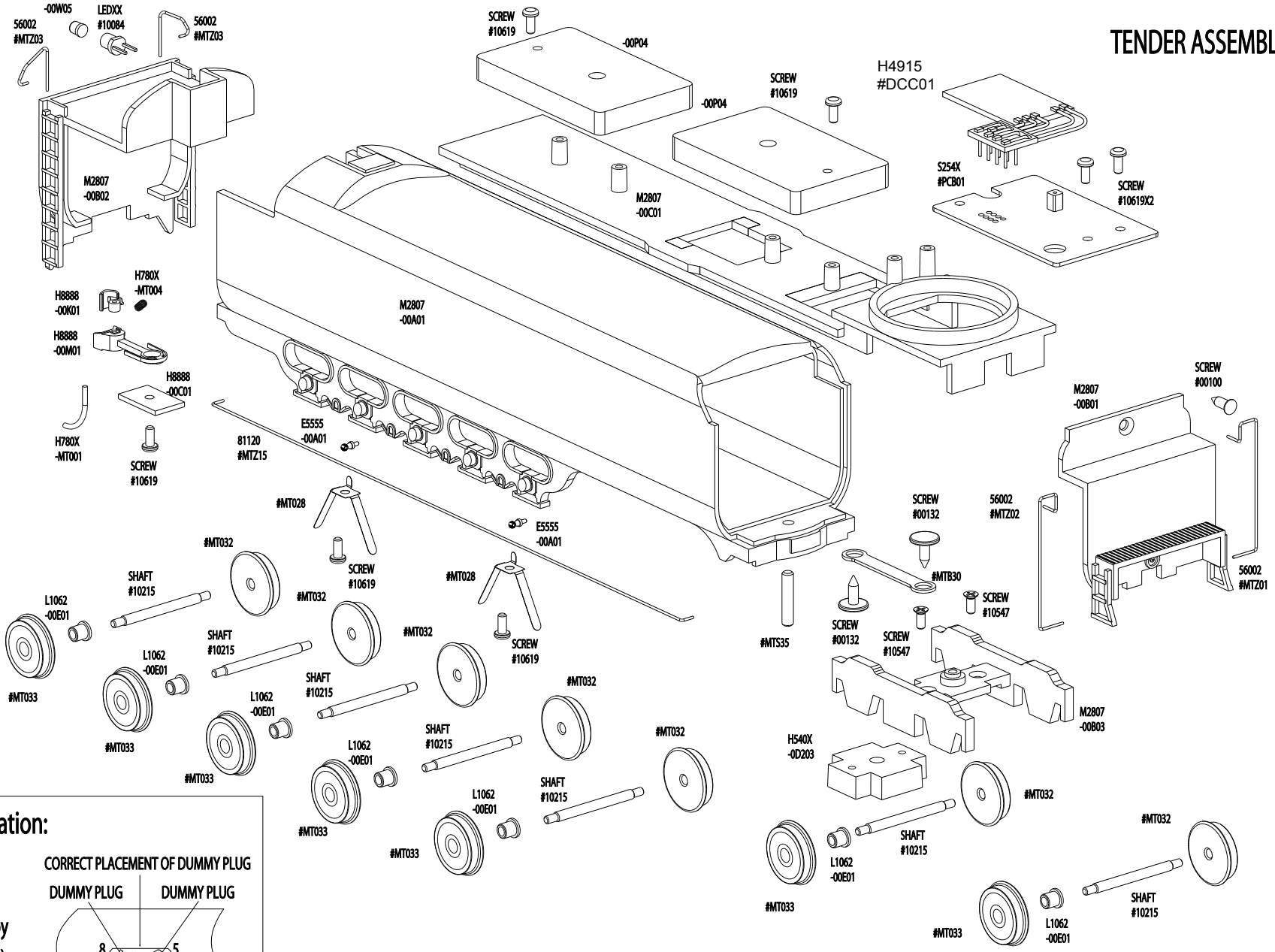
56002
#MTZ03
-00W05
LEDXX
#10084
56002
#MTZ03
M2807
-00B02
H780X
-MT004
H8888
-00K01
H8888
-00M01
H8888
-00C01
H780X
-MT001
SCREW
#10619
81120
#MTZ15
E5555
-00A01
M2807
-00A01
SCREW
#10619
-00P04
-00P04
SCREW
#10619
M2807
-00C01
H4915
#DCC01
S254X
#PCB01
SCREW
#10619X2
SCREW
#00100
M2807
-00B01
56002
#MTZ01
SCREW
#00132
56002
#MTZ02
#MTB30
SCREW
#10547
SCREW
#00132
SCREW
#10547
#MTS35
M2807
-00B03
H540X
-0D203
#MT028
#MT032
SHAFT
#10215
L1062
-00E01
#MT033
#MT028
E5555
-00A01
SCREW
#10619
SCREW
#10619
#MT032
#MT032
#MT032
#MT032
#MT032
#MT032
#MT032
#MT032
#MT033
#MT033
#MT033