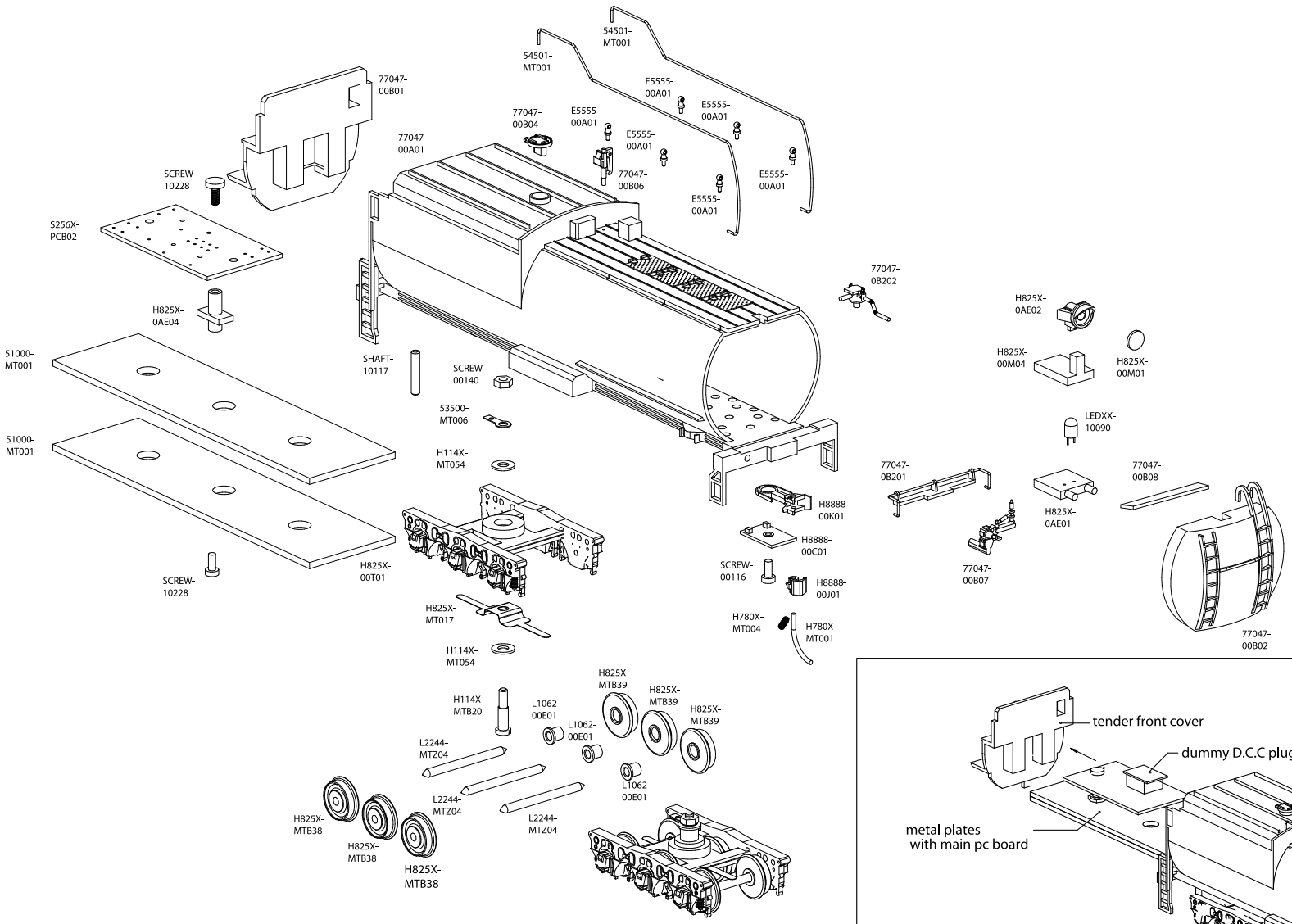

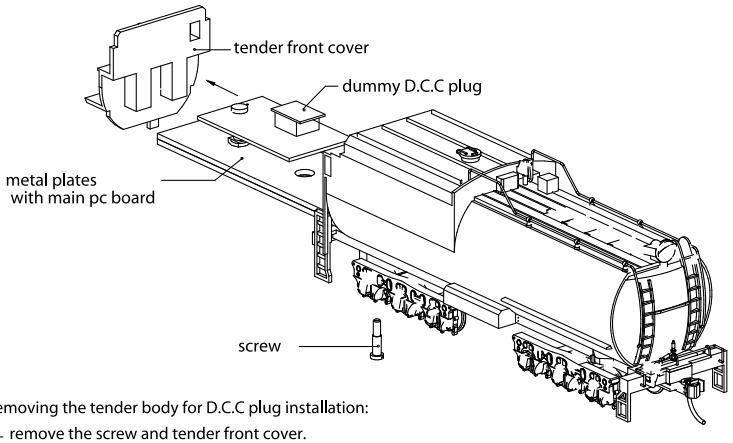

removing the tender body for D.C.C plug installation:

— remove the screw and tender front cover.
— and then pull out the metal plates with main pc board.
— replace the dummy D.C.C plug with D.C.C decoder plug.