BODY ASSEMBLY

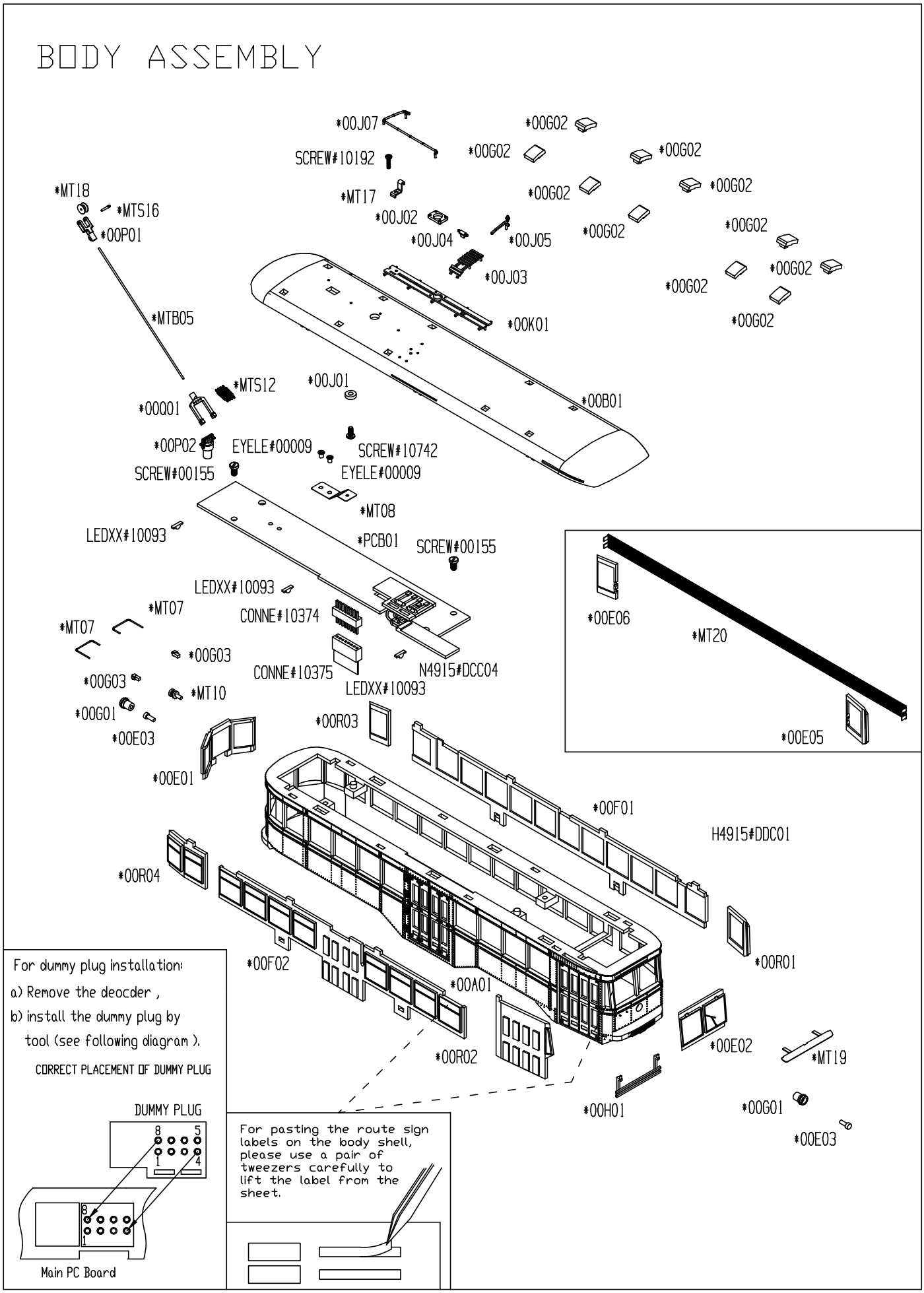

CHASSIS ASSEMBLY

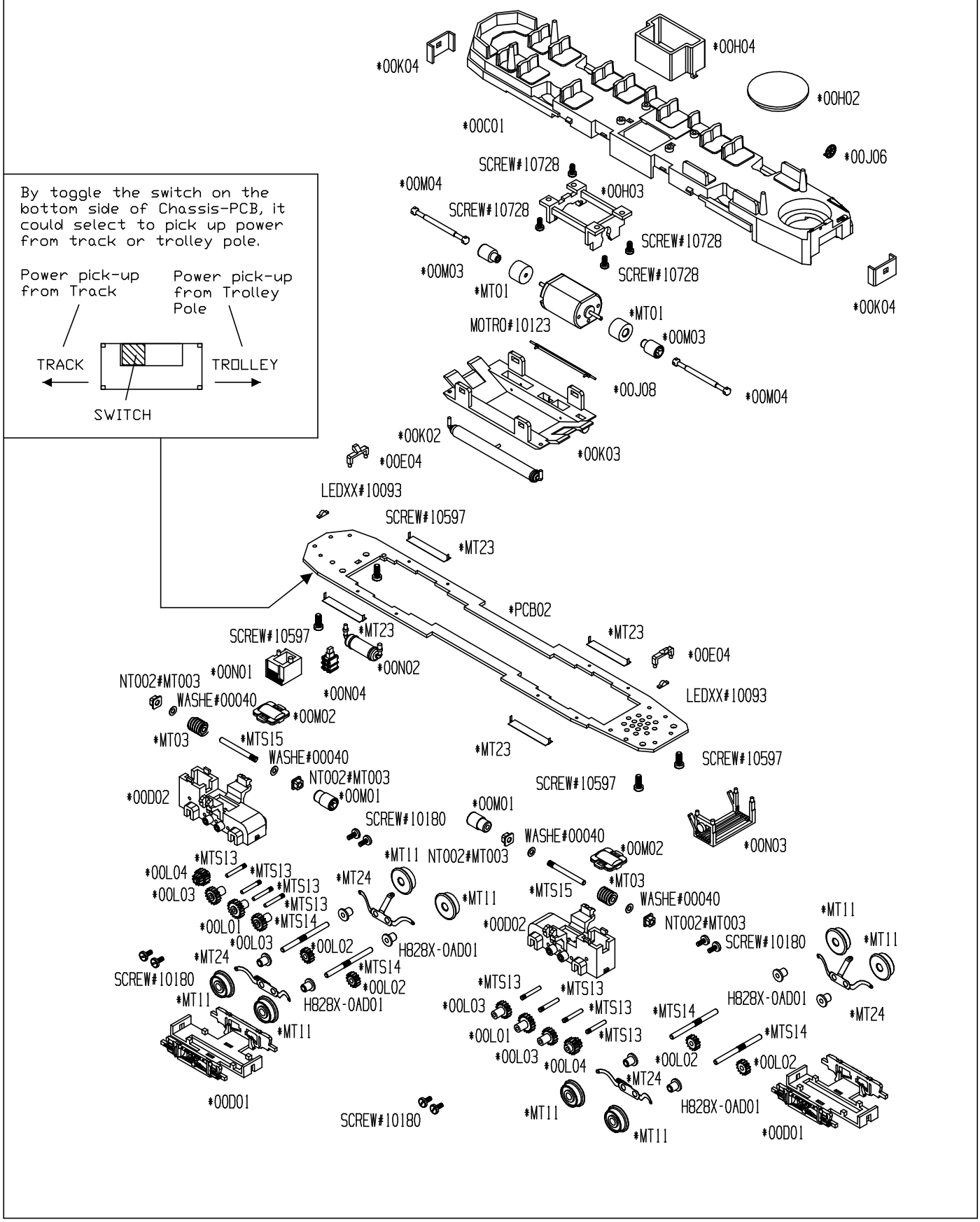

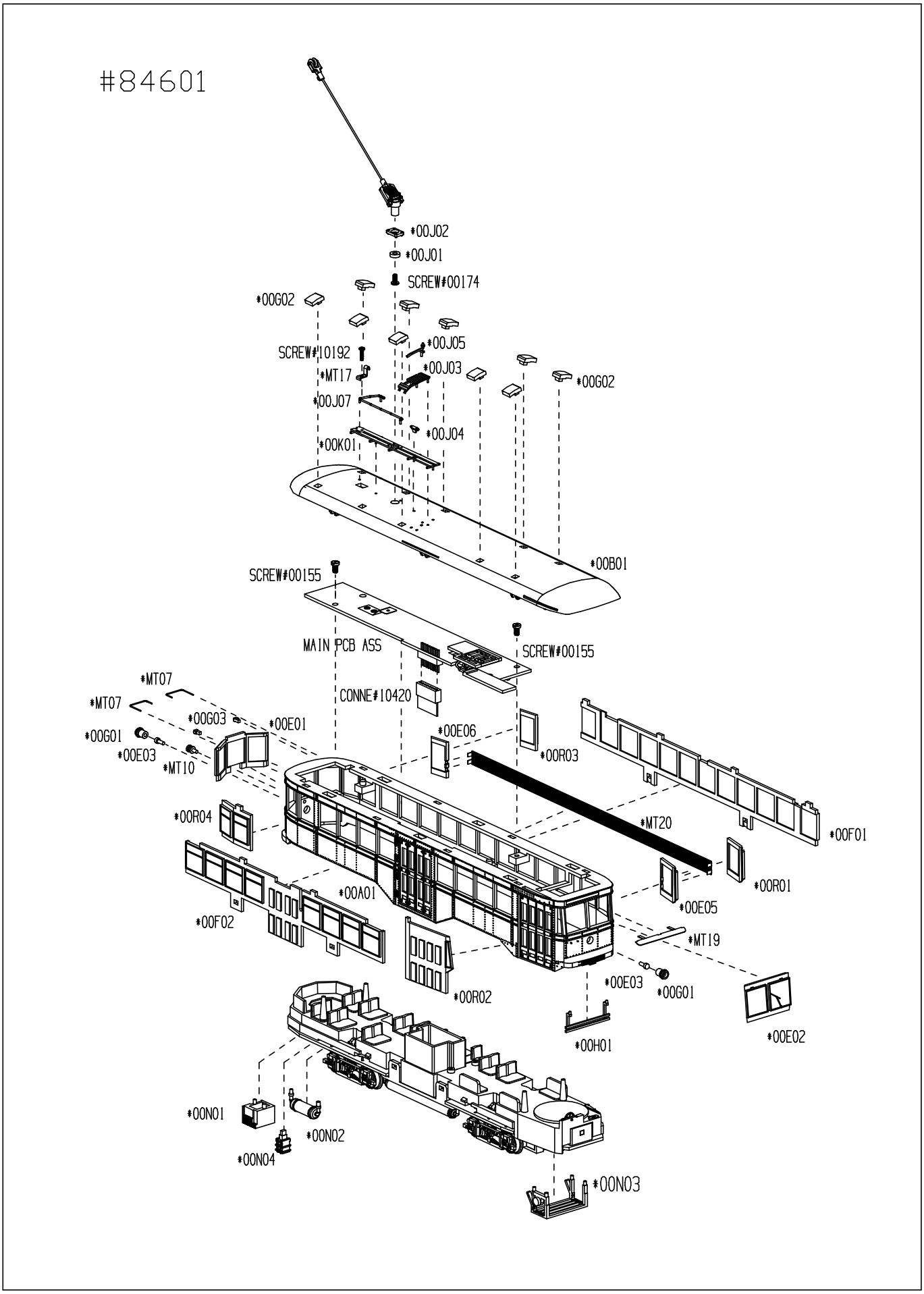
#84601
*00J02
*00J01
SCREW#00174
*00G02
SCREW#10192
*00J05
*MT17
*00J03
*00G02
*00J07
*00J04
*00K01
*00B01
SCREW#00155
MAIN PCB ASS
SCREW#00155
*MT07
*MT07
CONNE#10420
*00G03
*00E01
*00G01
*00E06
*00E03
*00R03
*MT10
*00R04
*MT20
*00F01
*00R01
*00A01
*00E05
*00F02
*MT19
*00E03
*00G01
*00R02
*00E02
*00H01
*00N01
*00N02
*00N04
*00N03

H846X-IS001