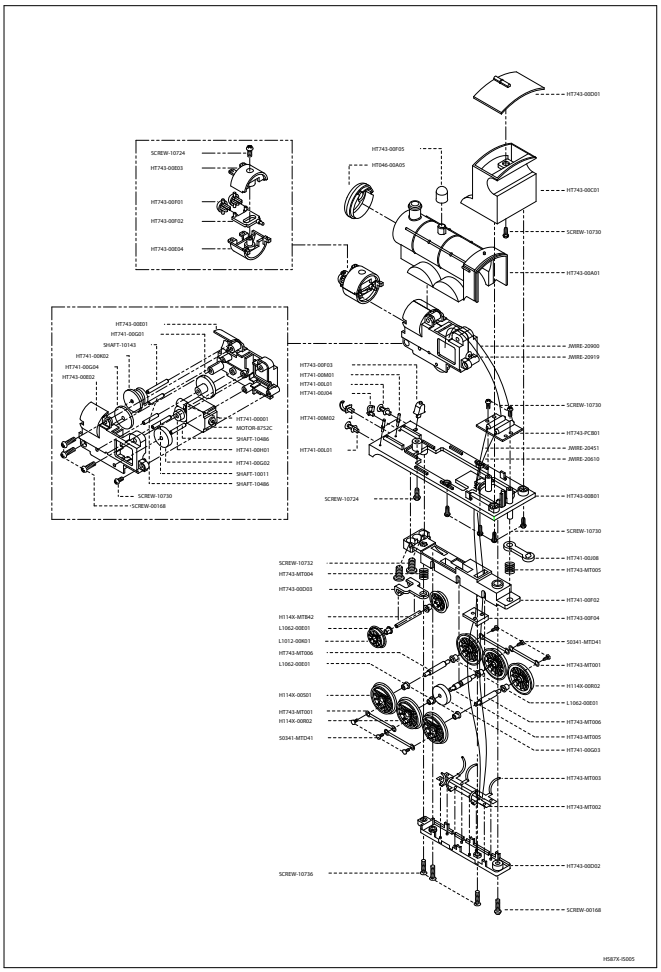
HT743-00D01
HT743-00C01
SCREW-10730
HT743-00A01
HT743-00F05
HT046-00A05
SCREW-10724
HT743-00B03
HT743-00F01
HT743-00F02
HT743-00E04
HT743-00E01
HT741-00G01
SHAFT-10143
HT741-00H02
HT741-00G04
HT743-00B02
HT741-00001
MOTOR-8753C
SHAFT-10486
HT741-00H01
HT741-00G02
SHAFT-10011
SHAFT-10486
SCREW-10730
SCREW-00168
JWIRE-20900
JWIRE-20919
HT743-00F03
HT741-00M01
HT741-00L01
HT741-00J04
HT741-00M02
HT741-00L01
SCREW-10730
HT743-PCB01
JWIRE-20451
JWIRE-20610
SCREW-10724
HT743-00B01
SCREW-10730
HT741-00J08
HT743-MT005
SCREW-10732
HT743-MT004
HT743-00D03
HT741-00F02
HT743-00F04
H1145-MTB42
L1062-00E01
L1012-00K01
S0341-MTD41
HT743-MT006
L1062-00E01
HT743-MT001
H1145-00R02
H1145-00S01
L1062-00E01
HT743-MT001
H1145-00R02
HT743-MT006
HT743-MT005
S0341-MTD41
HT741-00G03
HT743-MT003
HT743-MT002
SCREW-10736
HT743-00D02
SCREW-00168
HS87K-0005

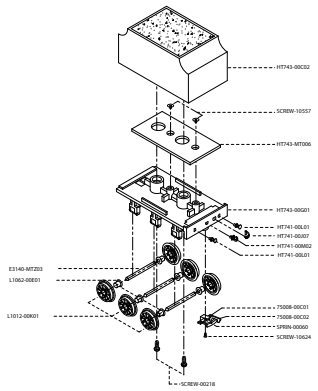
HT743-00C02
SCREW-10557
HT743-MT006
HT743-00G01
HT741-00L01
HT741-00J07
HT741-00M02
HT741-00L01
E3140-MTZ03
L1062-00E01
L1012-00K01
7500B-00C01
7500B-00C02
SPRN-00060
SCREW-10624
SCREW-00218
HS87K-0005