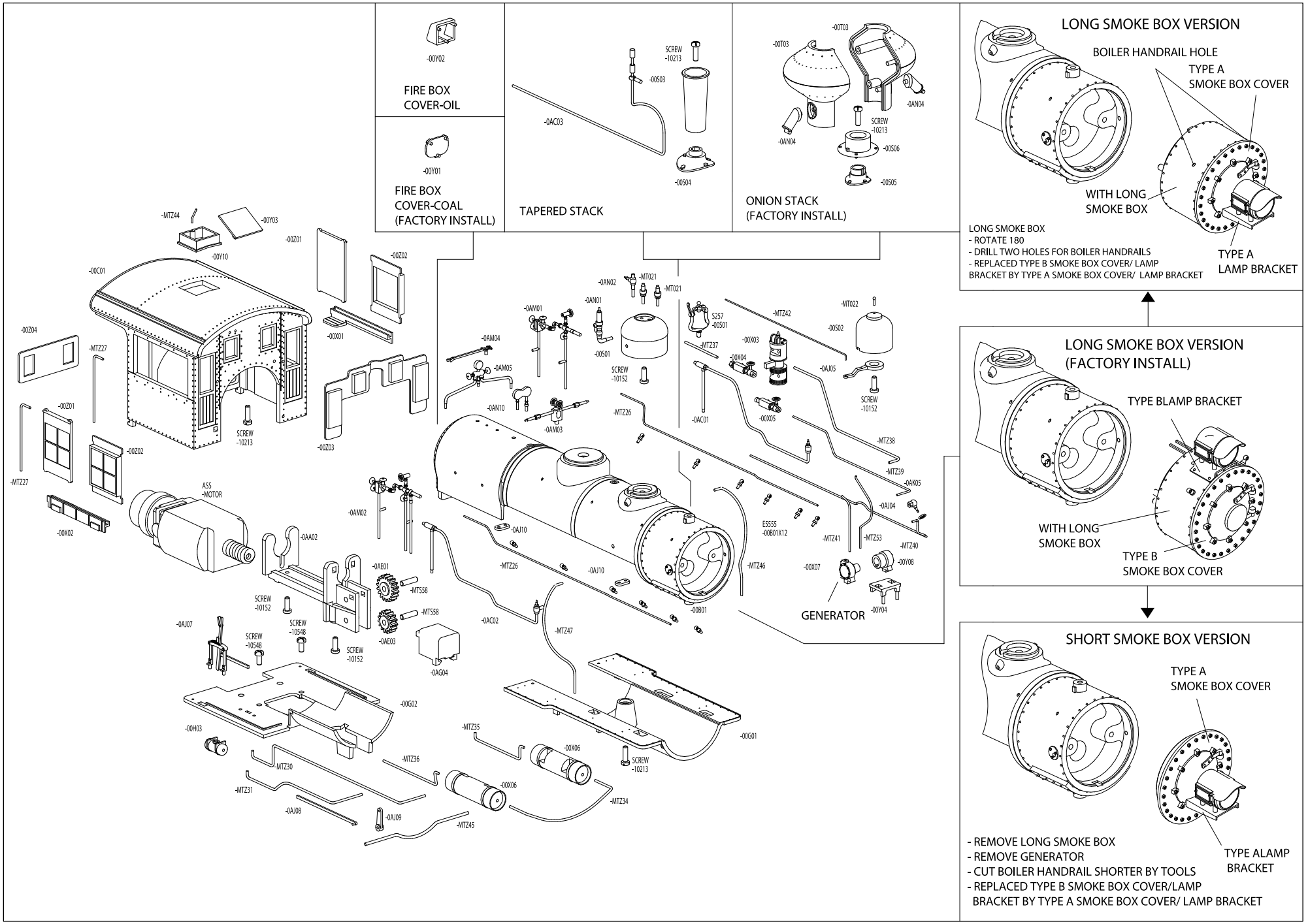
-00Y02
FIRE BOX
COVER-OIL
-00Y01
FIRE BOX
COVER-COAL
(FACTORY INSTALL)
SCREW
-10213
-00S03
-0AC03
-00S04
TAPERED STACK
-00T03
-00T03
-0AN04
-0AN04
SCREW
-10213
-00S06
-00S05
ONION STACK
(FACTORY INSTALL)
LONG SMOKE BOX VERSION
BOILER HANDRAIL HOLE
TYPE A
SMOKE BOX COVER
WITH LONG
SMOKE BOX
TYPE A
LAMP BRACKET
LONG SMOKE BOX
- ROTATE 180
- DRILL TWO HOLES FOR BOILER HANDRAILS
- REPLACED TYPE B SMOKE BOX COVER/ LAMP
BRACKET BY TYPE A SMOKE BOX COVER/ LAMP BRACKET
LONG SMOKE BOX VERSION
(FACTORY INSTALL)
TYPE BLAMP BRACKET
WITH LONG
SMOKE BOX
TYPE B
SMOKE BOX COVER
SHORT SMOKE BOX VERSION
TYPE A
SMOKE BOX COVER
TYPE ALAMP
BRACKET
- REMOVE LONG SMOKE BOX
- REMOVE GENERATOR
- CUT BOILER HANDRAIL SHORTER BY TOOLS
- REPLACED TYPE B SMOKE BOX COVER/LAMP
BRACKET BY TYPE A SMOKE BOX COVER/ LAMP BRACKET
-MTZ44
-00Y03
-00Z01
-00Y10
-00C01
-00Z02
-00X01
-00Z04
-MTZ27
-00Z01
-00Z02
-MTZ27
-00X02
SCREW
-10213
-00Z03
ASS
-MOTOR
-0AM02
-0AA02
-0AE01
-MTS58
-MTS58
-0AE03
SCREW
-10152
SCREW
-10548
SCREW
-10548
SCREW
-10152
-0AJ07
-0AG04
-00G02
-00H03
-MTZ35
-00X06
-00X06
-MTZ36
-MTZ30
-MTZ31
-0AJ08
-0AJ09
-MTZ45
-MTZ34
SCREW
-10213
-00G01
-0AN02
-MT021
-MT021
-0AN01
-0AM01
-00S01
SCREW
-10152
-0AM04
-0AM05
-0AN10
-0AM03
-MTZ26
-0AC01
S257
-00S01
-MTZ37
-00X03
-00X04
-00X05
-MTZ42
-MT022
-00S02
-0AJ05
SCREW
-10152
-MTZ38
-MTZ39
-0AK05
-0AJ04
-0AJ10
-MTZ26
-0AJ10
-00B01
E5555
-00B01X12
-MTZ46
-MTZ41
-MTZ53
-MTZ40
-00Y08
-00X07
-00Y04
GENERATOR
-0AC02
-MTZ47

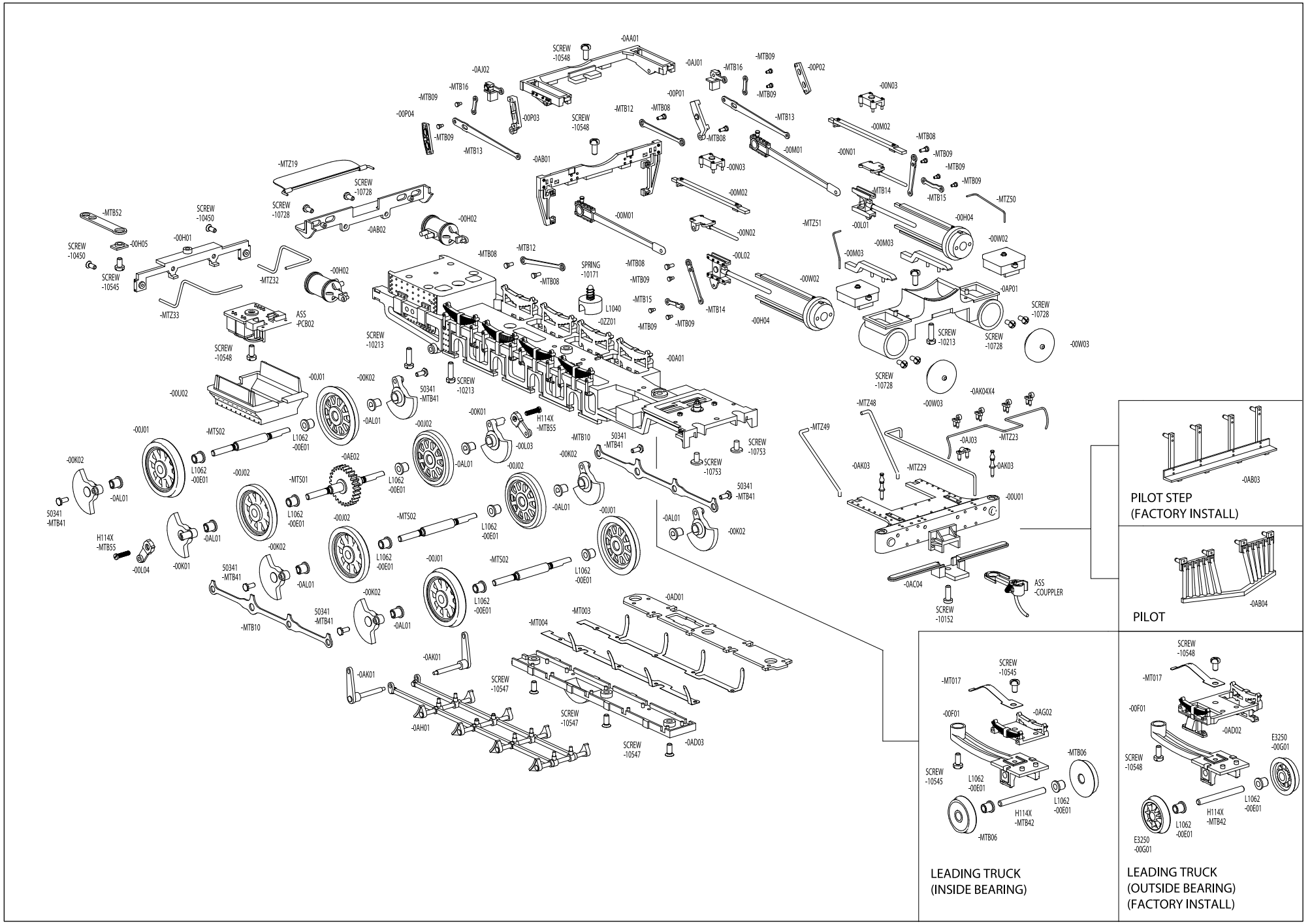
PILOT STEP
(FACTORY INSTALL)
PILOT
LEADING TRUCK
(INSIDE BEARING)
LEADING TRUCK
(OUTSIDE BEARING)
(FACTORY INSTALL)

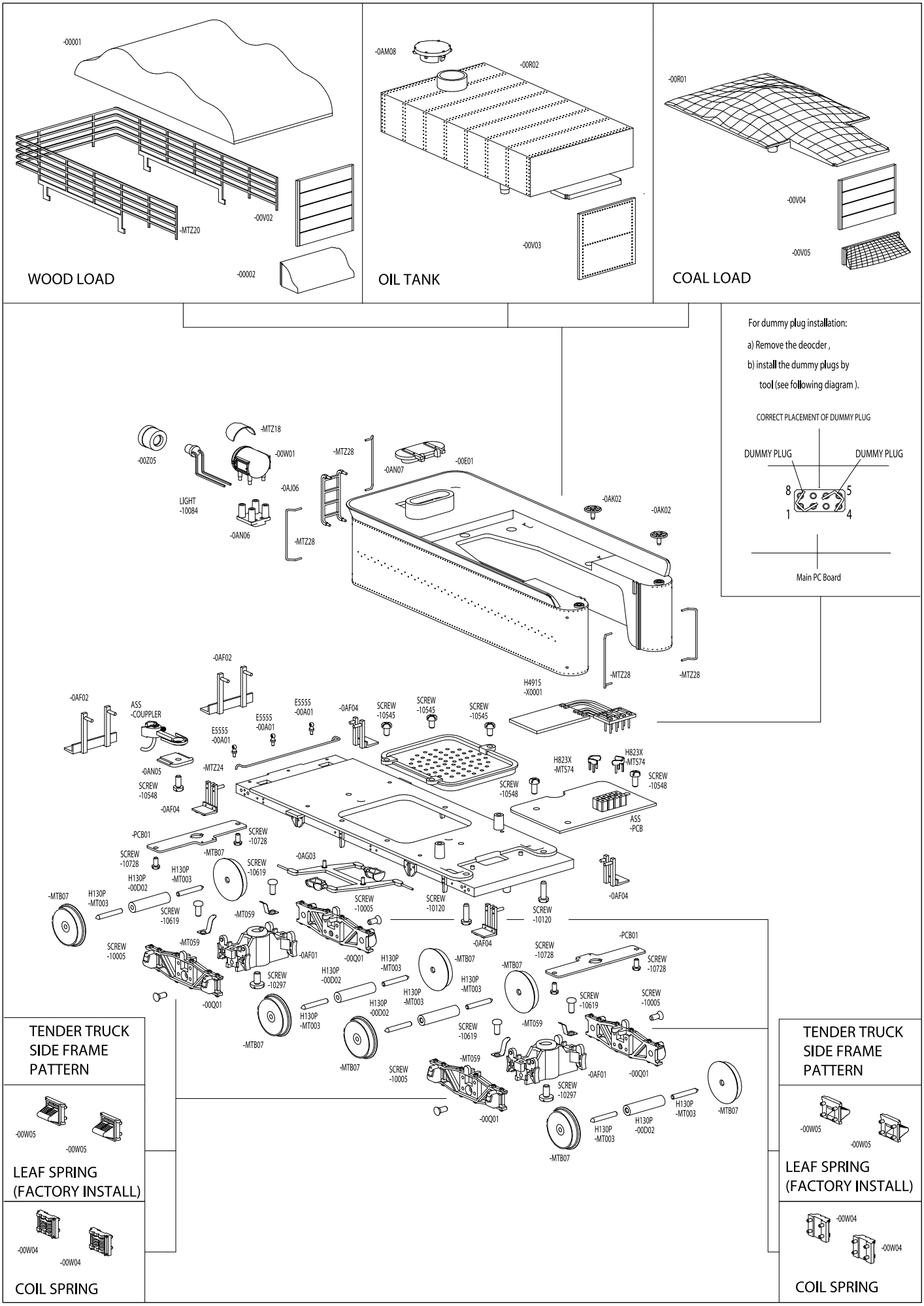
-00001
-MTZ20
-00V02
-00002
WOOD LOAD
-0AM08
-00R02
-00V03
OIL TANK
-00R01
-00V04
-00V05
COAL LOAD
For dummy plug installation:
a) Remove the deocder ,
b) install the dummy plugs by
tool (see following diagram).
CORRECT PLACEMENT OF DUMMY PLUG
DUMMY PLUG
DUMMY PLUG
8
5
1
4
Main PC Board
-00Z05
-MTZ18
-00W01
LIGHT
-10084
-0AN06
-0AJ06
-MTZ28
-0AN07
-00E01
-0AK02
-0AK02
-MTZ28
-MTZ28
-MTZ28
H4915
-X0001
-0AF02
-0AF02
ASS
-COUPPLER
E5555
-00A01
E5555
-00A01
E5555
-00A01
-0AF04
SCREW
-10545
SCREW
-10545
SCREW
-10545
-0AN05
-MTZ24
SCREW
-10548
-0AF04
SCREW
-10548
H823X
-MTS74
H823X
-MTS74
SCREW
-10548
ASS
-PCB
-PCB01
SCREW
-10728
-MTB07
SCREW
-10728
H130P
-MT003
H130P
-00D02
SCREW
-10619
-0AG03
-MTB07
H130P
-MT003
SCREW
-10619
-MT059
SCREW
-10005
SCREW
-10120
SCREW
-10120
-0AF04
-0AF04
-PCB01
SCREW
-10005
-MT059
-0AF01
-00Q01
H130P
-MT003
-MTB07
-MTB07
SCREW
-10728
SCREW
-10728
SCREW
-10297
H130P
-00D02
H130P
-MT003
SCREW
-10619
SCREW
-10005
-00Q01
H130P
-MT003
H130P
-00D02
SCREW
-10619
-MT059
-MTB07
-MTB07
-MT059
SCREW
-10005
-0AF01
-00Q01
SCREW
-10297
-00Q01
H130P
-MT003
-MTB07
H130P
-00D02
H130P
-MT003
-MTB07
TENDER TRUCK
SIDE FRAME
PATTERN
-00W05
-00W05
LEAF SPRING
(FACTORY INSTALL)
-00W04
-00W04
COIL SPRING
TENDER TRUCK
SIDE FRAME
PATTERN
-00W05
-00W05
LEAF SPRING
(FACTORY INSTALL)
-00W04
-00W04
COIL SPRING